TOLERANCE UNLESS OTHERWISE SPECIFIED	
.X	±0.25
.XX	±0.13
.XXX	±0.05

THIS IS A C.A.D. GENERATED DRAWING
DO NOT MAKE MANUAL REVISIONS TO MASTER.

ISSUE NUMBER	
ORIGINAL	1

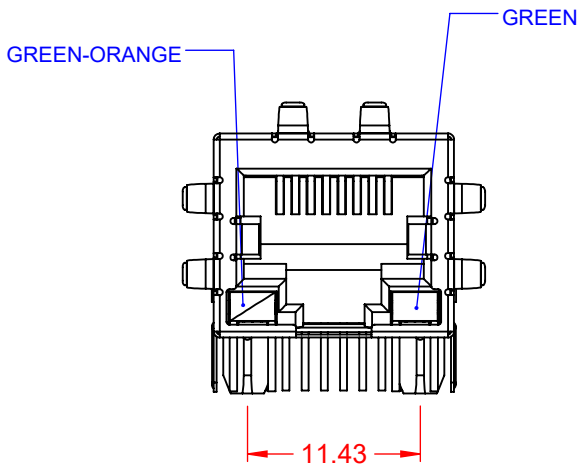

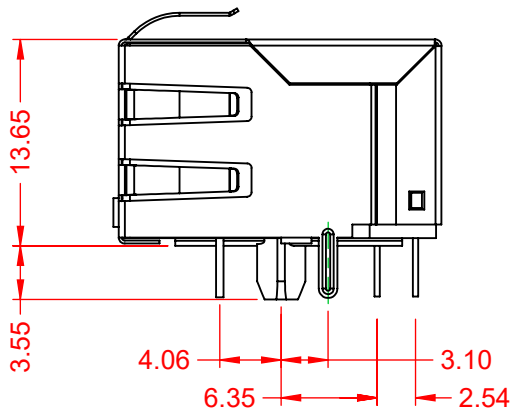

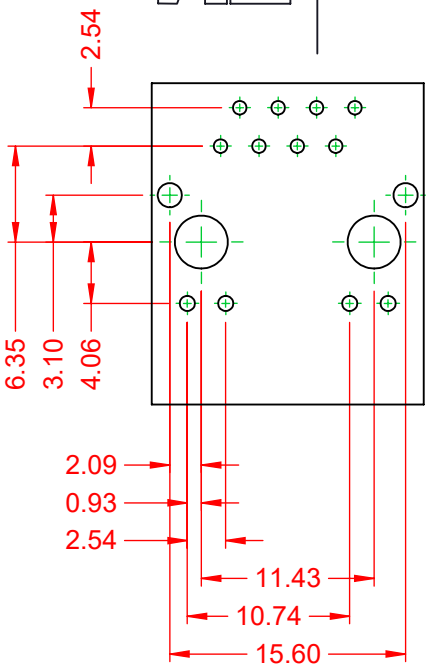

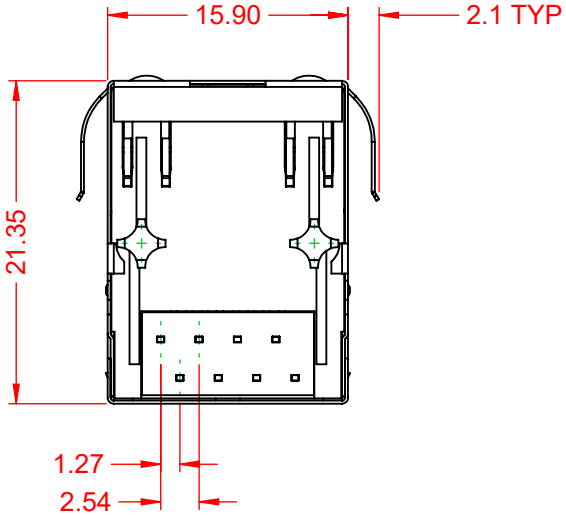

NOTES:

1. MATERIALS:
   - INSULATOR: PBT, BLACK, UL 94V-0
   - CONTACT: PHOSPHOR BRONZE, SELECT 30μ" GOLD PLATING ON CONTACT AREA TIN ON TAILS OVER NICKEL
2. VOLTAGE RATING: 125 VAC RMS
3. CURRENT RATING: 1.5 AMPS @25°C
4. CONTACT RESISTANCE: 20mΩ MAX
5. INSULATOR RESISTANCE: 1000 MΩ MIN @ 500V DC
5. DIELECTRIC WITHSTANDING: 1000V AC CONTACT TO CONTACT OR 1500VDC CONTACT TO SCREEN AND TEST PANEL @0.5mA 50Hz OR 60Hz 60s
6. DURABILITY: 750 CYCLES MIN
7. MATING/UNMATING FORCE: 30N/3.06KG MAX
8. RETENTION STRENGTH: 30N MIN FOR 60s ±5s
9. OPERATING TEMP: -40°C TO +85°C
10. STORAGE TEMP: -40°C TO +85°C RELATIVE HUMIDITY <80%

MATES WITH MODULAR PLUG CONFORMING TO FCC PART 68, SUBPART F.

RJ45, RIGHT ANGLE PCB MOUNT

ACAD REFERENCE NO.:	J9P Assembly		
DRAWN:	C.B	DATE:	January 17, 2020
CHECKED:		DATE:	
SCALE:	2:1	SHEET	1 OF 1
DRAWING NUMBER:	J9P Assembly	ISSUE	1
PART NUMBER:	J9P018862P73201		

EDAC INC
TORONTO, ONTARIO
CANADA
YOUR CONNECTION TO QUALITY & SERVICE

THESE DRAWINGS AND SPECIFICATIONS ARE THE PROPERTY OF EDAC INC.,AND SHALL NOT BE REPRODUCED,OR COPIED OR USED AS THE BASIS FOR THE MANUFACTURE OR SALE OF APPARATUS WITHOUT WRITTEN PERMISSION.

RoHS COMPLIANT

THIS SERIES FULLY CONFORMS TO THE EUROPEAN UNION DIRECTIVES 2011/65/EU FOR RoHS COMPLIANCY.