NOTES:
INSULATOR MATERIAL - POLYPHENYLENE SULPHIDE, UL 94V-0
CONTACT MATERIAL - PHOSPHOR BRONZE ALLOY
CONTACT PLATING - GOLD OVER NICKEL UNDERPLATE
MOUNTING OPTION - 07-M3-0.5 Metric Threaded Inserts
CONTACT TYPE - 542-Wire Wrap .045 Sq.(1.14 Sq.) - Tail LG=.750(19.05)

TOLERANCE UNLESS OTHERWISE SPECIFIED	
.XX	±.01
.XXX	±.005
.XXXX	±.0005

THIS IS A C.A.D. GENERATED DRAWING
DO NOT MAKE MANUAL REVISIONS TO MASTER.

ISSUE NUMBER	
ORIGINAL	1

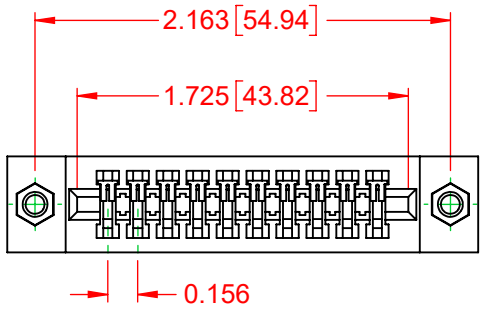

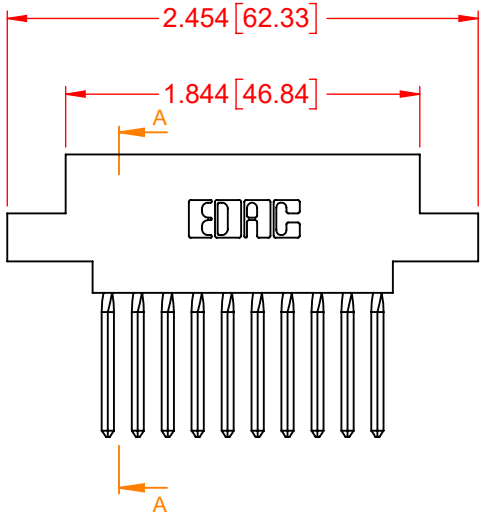

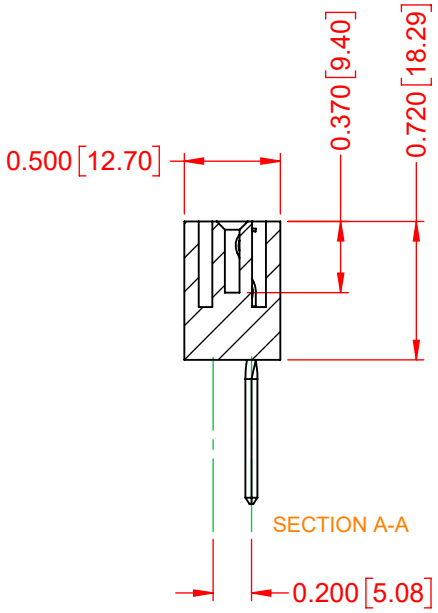

RoHS COMPLIANT

THIS SERIES FULLY CONFORMS TO THE EUROPEAN UNION DIRECTIVES 2011/65/EU FOR RoHS COMPLIANCY.

317 SERIES CARD EDGE CONNECTOR

EDAC INC
TORONTO, ONTARIO
CANADA
YOUR CONNECTION TO QUALITY & SERVICE

THESE DRAWINGS AND SPECIFICATIONS ARE THE PROPERTY OF EDAC INC.,AND SHALL NOT BE REPRODUCED,OR COPIED OR USED AS THE BASIS FOR THE MANUFACTURE OR SALE OF APPARATUS WITHOUT WRITTEN PERMISSION.

ACAD REFERENCE NO.:	317 Assembly		
DRAWN:	C.B	DATE:	February 5, 2020
CHECKED:		DATE:	
SCALE:	1:1	SHEET	1 OF 1
DRAWING NUMBER:	317-010-542-607	ISSUE	1
PART NUMBER:	317-010-542-607		