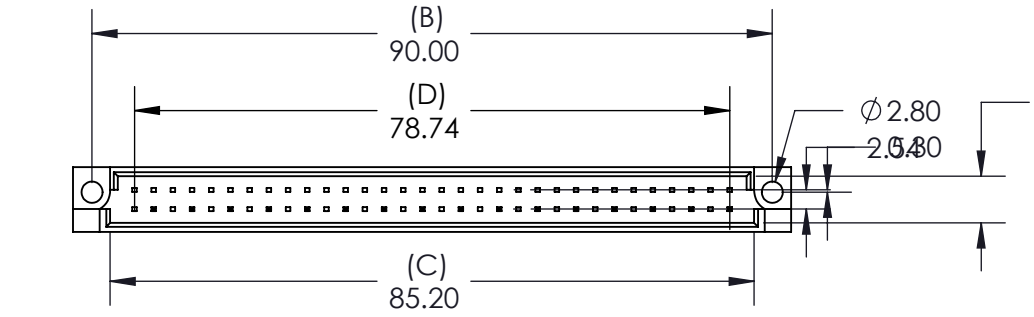

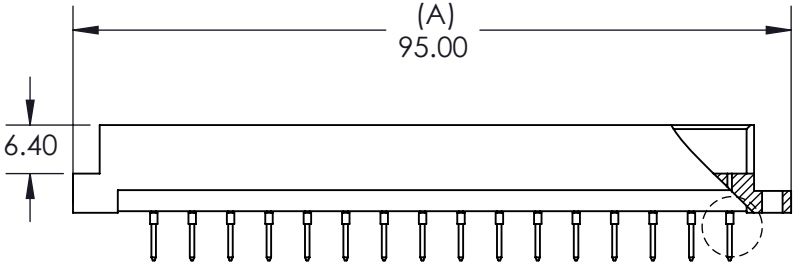

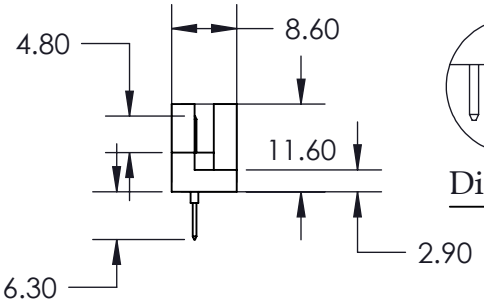

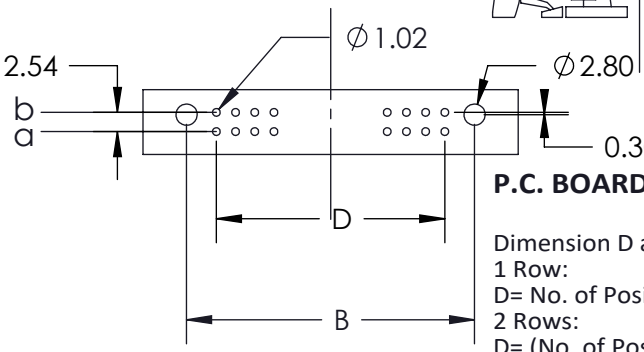

THIS IS A C.A.D. GENERATED DRAWING
DO NOT MAKE MANUAL REVISIONS TO MASTER.

ISSUE NUMBER
ORIGINAL ①

P.C. BOARD PATTERN

Dimension D at 2.54 Pitch:
1 Row:
D= No. of Positions-1 X 2.54
2 Rows:
D= (No. of Positions/2)-1 X 2.54

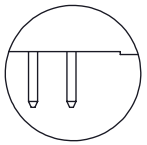

Dip Type

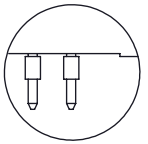

Press Fit Type

Features:

- High density 64 Contact 2 Row Metal-to-Metal Connector on 2.54mm (.100") Grid
- Contact Material and Finish: CA725 with selective gold plating: 2- Gold Flash Plating and tin on tails 3- 15u" of Gold Plating
- Contact Tails: 0.6 x 0.5mm (.024" x .020") 6- 30u" of Gold Plating
- Contact Spacing: 2.54 x 2.54mm (.100" x .100") single or double rows; or 2.54 x 5.08mm (.100" x .200") single or double rows
- Available in: 5, 8, 10, 16, 20, 32, and 64positions
- Connectors designed to meet DIN 41612-C specifications

Specifications:

- Current Rating: 2 Amperes @ 20°C
- Contact Material: Brass
- Contact Plating: Selective Gold Plating
- Contact Resistance: 30 milliohms, maximum
- Insulator Material: 30% Glass Filled PBT, UL 94V-0
- Insulation Resistance: Mated - 1000 Mega (10^6) ohms
- Dielectric Withstanding Voltage: 1000 V.A.C RMS
- Basic Grid: 2.54mm (.100")
- Operating Temperature: -55°C to +105°C

RoHS COMPLIANT

THIS SERIES FULLY CONFORMS TO THE EUROPEAN UNION DIRECTIVES 2002/95/EC AND 2002/96/EC FOR RoHS COMPLIANCY

461 Series Metal-To-Metal Plug DIN Connector
PART NUMBER: 461-116-273-121

EDAC INC
TORONTO, ONTARIO
CANADA
YOUR CONNECTION TO QUALITY & SERVICE

THESE DRAWINGS AND SPECIFICATIONS ARE THE PROPERTY OF EDAC INC.,AND SHALL NOT BE REPRODUCED,OR COPIED OR USED AS THE BASIS FOR THE MANUFACTURE OR SALE OF APPARATUS WITHOUT WRITTEN PERMISSION.

ACAD REFERENCE NO.	461 -ENG-MASTER	
DRAWN:R.STA.MONICA	DATE: JUL.20/10	
CHECKED:	DATE:	
SCALE: NTS	SHEET 1 OF 1	
DRAWING NUMBER	ISSUE	
461 -ENG-MASTER	1	