ISSUE NUMBER	
ORIGINAL	1

THIS IS A C.A.D. GENERATED DRAWING
DO NOT MAKE MANUAL REVISIONS TO MASTER.

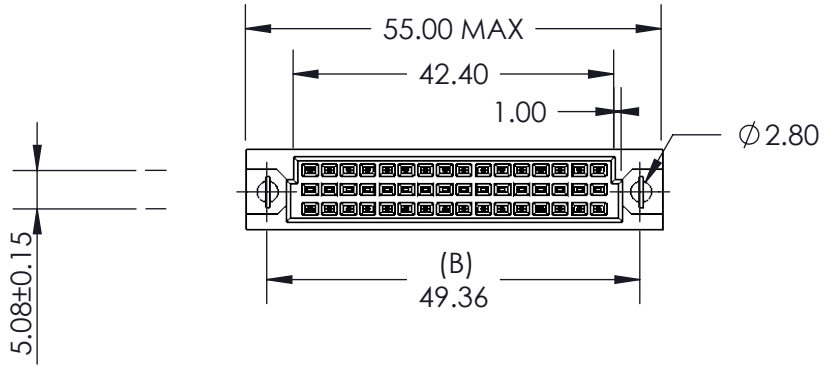

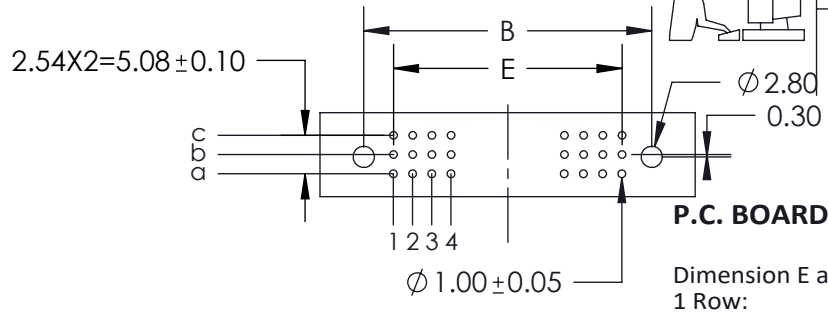

P.C. BOARD PATTERN

Dimension E at 2.54 Pitch:
1 Row:
E= No. of Positions-1 X 2.54
2 Rows:
E= (No. of Positions/2)-1 X 2.54
3 Rows:
E= (No. of Positions/3)-1 X 2.54

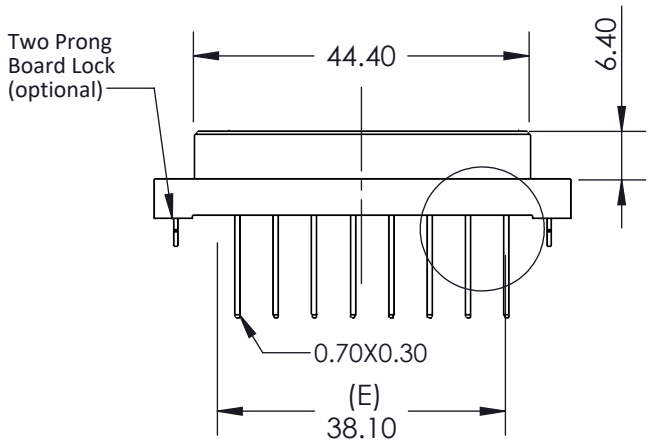

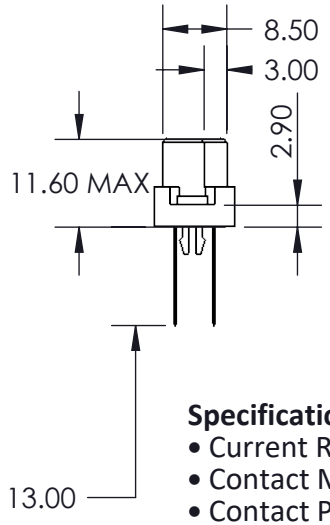

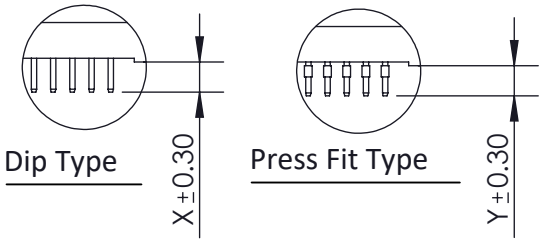

Features:

- High density 96 Contacts 3 Row Metal-to-Metal Connector on 2.54mm (.100”) Grid
- Contacts: Straight
- Contact Material: Phosphor Bronze with selective gold plating: 2-Gold Flash Plating
  and tin on tails 3- 15u" of Gold Plating
  6- 30u" of Gold Plating
- Contact Tails: 0.7 x 0.3mm (.028” x .012”) Rectangular
- Contact Spacing: 2.54 x 2.54mm (.100” x .100”) single, double or triple rows; or 2.54 x 5.08mm (.100” x .200”) single, double or triple rows.
- Available in: 8, 16, 24, 32, 48, 64, and 96 positions
- Connectors designed to meet DIN 41612 specifications

Specifications:

- Current Rating: 2 Amperes @ 20°C
- Contact Material: Copper Alloy
- Contact Plating: Selective Gold Plating
- Contact Resistance: 30 milliohms, maximum
- Insulator Material: 30% Glass Filled PBT, UL 94V-0
- Insulation Resistance: 1000 Mega (10^6) ohms MIN at DC500V
- Dielectric Withstanding Voltage: 1000 VAC FOR 1 MINUTE
- Basic Grid: 2.54mm (.100”)
- Operating Temperature: -55°C to +125°C

RoHS COMPLIANT

THIS SERIES FULLY CONFORMS TO THE
EUROPEAN UNION DIRECTIVES 2002/95/EC
AND 2002/96/EC FOR RoHS COMPLIANCY

496 Series Metal-To-Metal Receptacle DIN Connector
PART NUMBER: 496-116-640-623

EDAC INC
TORONTO, ONTARIO
CANADA
YOUR CONNECTION TO QUALITY & SERVICE

THESE DRAWINGS AND SPECIFICATIONS ARE THE PROPERTY OF EDAC INC.,AND SHALL NOT BE REPRODUCED,OR COPIED OR USED AS THE BASIS FOR THE MANUFACTURE OR SALE OF APPARATUS WITHOUT WRITTEN PERMISSION.

ACAD REFERENCE NO.	496 -ENG-MASTER		
DRAWN:R.STA.MONICA		DATE: AUG.12/10	
CHECKED:		DATE:	
SCALE: NTS		SHEET 1 OF 1	
DRAWING NUMBER	496 -ENG-MASTER	ISSUE	1