ITEM NO.	DESCRIPTION	QTY.
1	WIRE	1
2	MPM-VC0-102-2R00-A00	1
3	OVERMOLDING	1
4	USB A-2.0	1

REVISIONS			
REV.	DESCRIPTION	DATE	BY
1	ORIGINAL	DRAWN DATE	

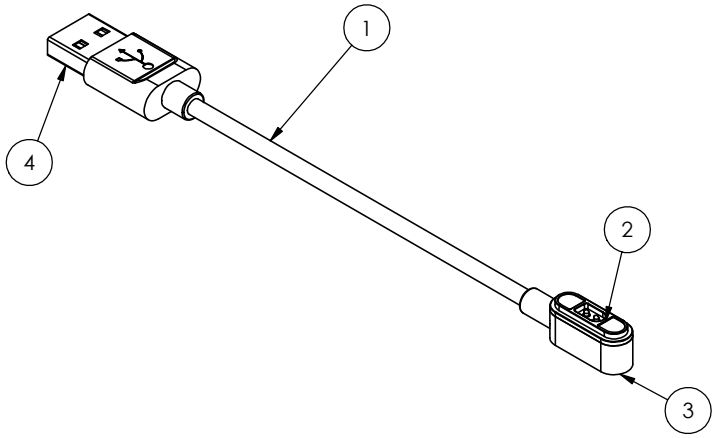

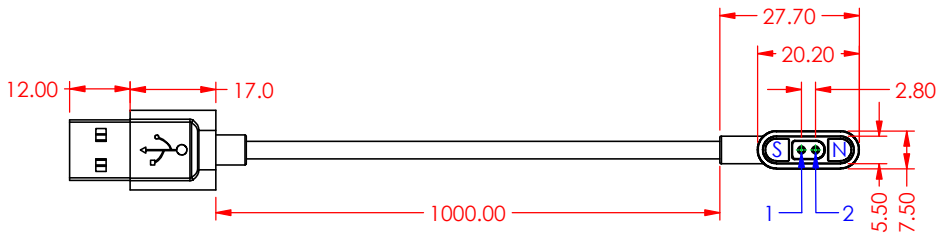

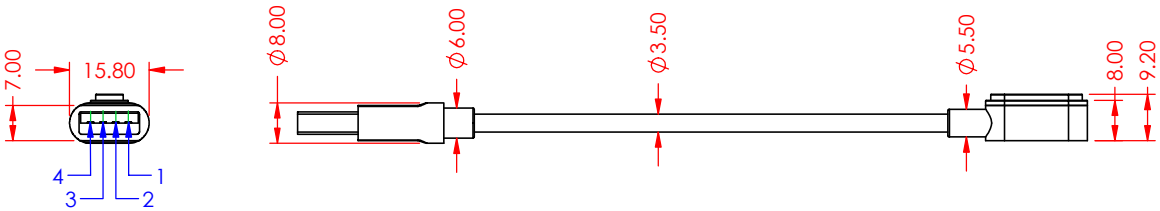

SPECIFICATIONS

CURRENT RATING:	1.5A
VOLTAGE RATING:	12V
WITHSTANDING VOLTAGE:	500V
INSULATION RESISTANCE:	1000MΩ MIN FOR 1 MIN
CONTACT RESISTANCE:	50mΩ MAX
TEMPERATURE RANGE:	-20°C TO 60°C
INSULATOR MATERIAL:	HTN
INSULATOR COLOR:	BLACK
CONTACT MATERIAL	BRASS
CONTACT PLATING	5μ" GOLD PLATING
MAGNET MATERIAL:	N52
MATING CYCLES:	10000
STROKE:	1.0 MM
CONTACT FORCE:	80±20 g
MATING PARTS:	MPF-VC0-102-2P00-A00
	MPF-VC0-102-2P00-A10

CABLE SPECIFICATIONS

CABLE MATERIAL:	PVC
CABLE COLOR:	BLACK
OVERMOLDING MATERIAL:	TPE
OVERMOLDING COLOR:	BLACK
OPPOSITE END	USB A-2.0

POGO PIN	WIRE COLOR	USB PIN NO.	SIGNAL
1	RED	1	VCC
-	-	2	-
-	-	3	-
2	BLACK	4	GND

NOTE:IR REFLOW AND WAVE SOLDERING NOT RECOMMENDED AS THE PROCESSES CAN DEMAGNETIZE THE CONNECTOR MAGNETS.

EDAC

RoHS COMPLIANT

THESE DRAWINGS AND SPECIFICATIONS ARE THE PROPERTY OF EDAC, AND SHALL NOT BE REPRODUCED , OR COPIED OR USED AS THE BASIS FOR THE MANUFACTURE OR SALE OF APPARATUS WITHOUT WRITTEN PERMISSION.

DRAWN BY	V.K.	MALE CABLE ASSEMBLY, RECTANGULAR, 2.8MM PITCH, 2 POSITIONS	
DRAWN DATE	08/07/2025		
CHECKED BY	R.S.M.	PART NUMBER	MCM-YC0-102-2R00-BK0
CHECK DATE	08/07/2025		
TOLERANCES		MATERIAL	SIZE A
.X	±0.5	ALL DIMENSIONS AND TOLERANCES IN MM	REVISION
.XX	±0.2		1
.XXX	±0.1	SCALE 1:1.5	SHEET 1 OF 1